VILLAGE PLAZA CONDOMINIUM

Located in Lot 16, Tamarack Resort Phase 2 Village
In the NW 1/4 of Section 5, T.15N., R.3E., B.M.
Valley County, Idaho

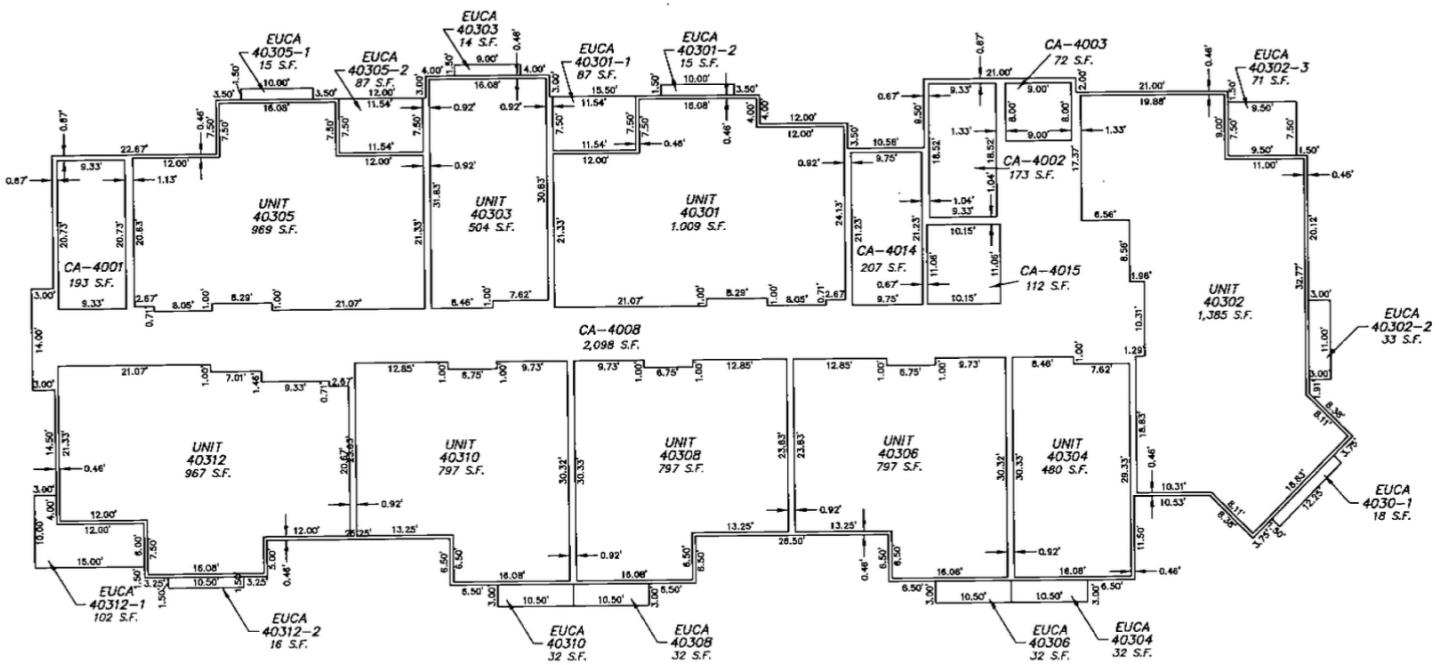

SCALE: 1" = 10'

BUILDING 4
LEVEL 3

SECESH ENGINEERING, INC.
McCall, Idaho

SHEET NO. 6 OF 36