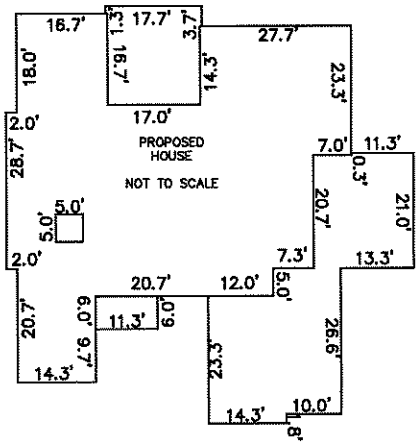

PRELIMINARY PLOT PLAN FOR

SPEIGH BUILT

LOT 37, WEXFORD RESERVE
SUBDIVISION, PH. 1
2928 WEXFORD POND WAY
REF: B.M. 2019, 914–918
WAKE FOREST TOWNSHIP
WAKE COUNTY, NORTH CAROLINA
OCTOBER 12, 2021
ZONED R–40W

50 25 0 50 100

SCALE 1"=50'

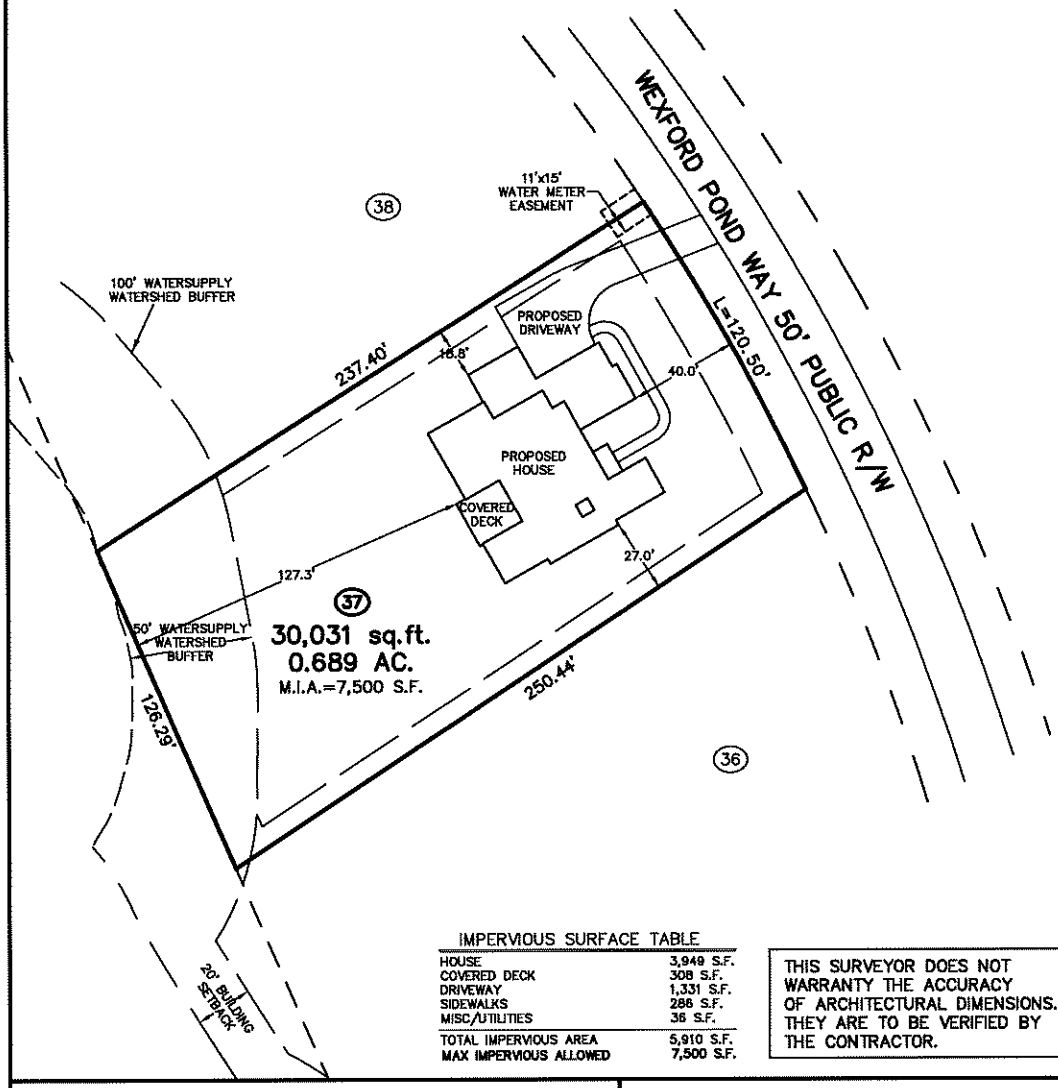

IMPERVIOUS SURFACE TABLE

HOUSE	3,949 S.F.
COVERED DECK	308 S.F.
DRIVEWAY	1,331 S.F.
SIDEWALKS	286 S.F.
MISC/UTILITIES	36 S.F.
TOTAL IMPERVIOUS AREA	5,910 S.F.
MAX IMPERVIOUS ALLOWED	7,500 S.F.

THIS SURVEYOR DOES NOT WARRANTY THE ACCURACY OF ARCHITECTURAL DIMENSIONS. THEY ARE TO BE VERIFIED BY THE CONTRACTOR.

CAWTHORNE, MOSS & PANCIERA, P.C.
Professional Land Surveyors
C–1525
333 S. White Street
Post Office Box 1253
Wake Forest, N.C. 27588
(919)556–3148

NOTES:
–THIS PLAN DOES NOT REFLECT AN ACTUAL SURVEY. IT IS A PRELIMINARY PLAN AND SHOULD BE USED FOR ITS INTENDED PURPOSE ONLY.
–NOT FOR RECORDATION, CONVEYANCES, OR SALES.