SKETCH/AREA TABLE ADDENDUM

SUBJECT INFO			
File No.: 13229409-06012025	Parcel No.: VM2N4895TG-2V45G89J		
Property Address: 1096 Roadrunner			
City: Bartonville	County: Denton	State: Tx	ZipCode: 76226
Owner: Vera, Richard & Krystal			
Client: Rhodes, Russell, Penfed Realty	Client Address:		
Appraiser Name: Moore, Chris	Date: 06-01-2025		

SKETCH

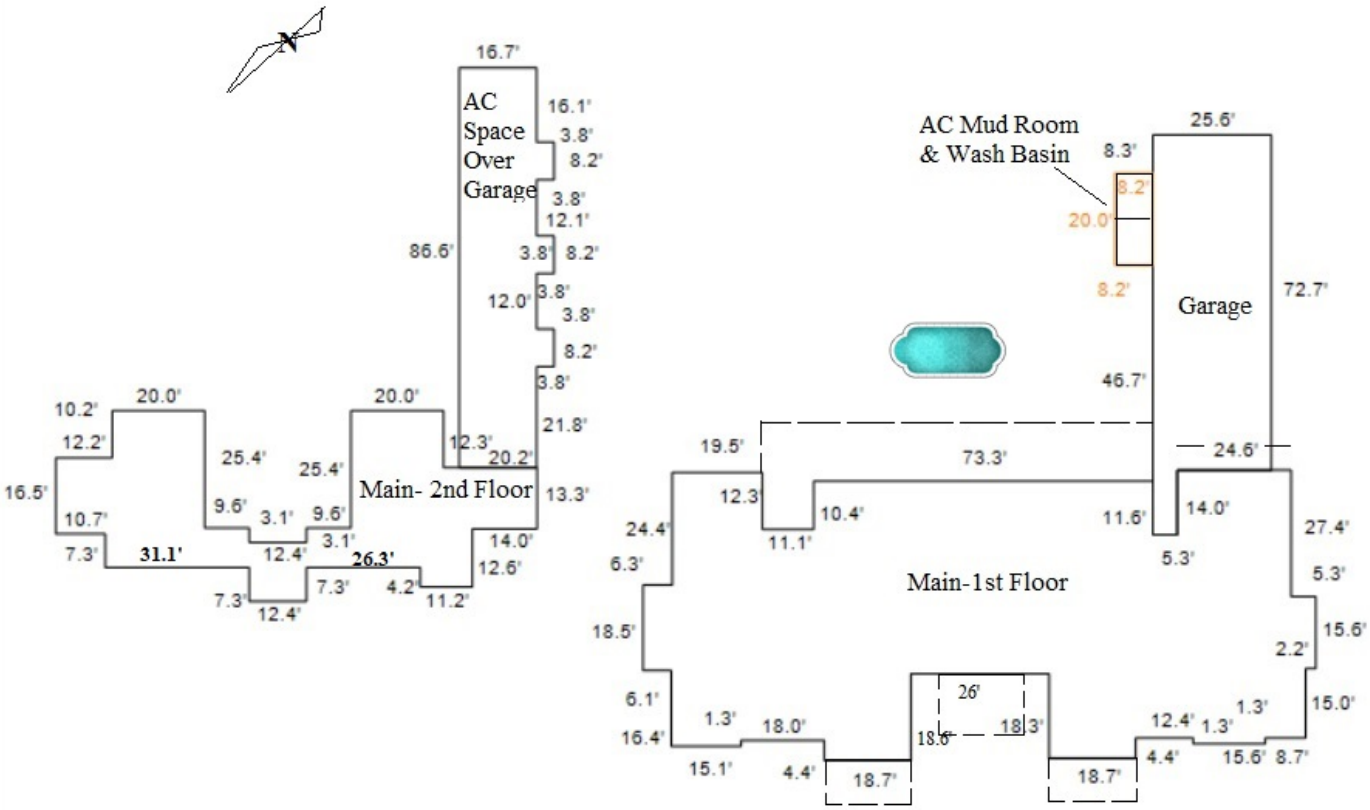

1096 Roadrunner
Bartonville, Tx

AREA CALCULATIONS SUMMARY

Code	Description	Factor	Net Size	Perimeter	Net Totals
GLA1	First Floor	1.0	7421.9	506.2	7421.9
GLA2	Second Floor	1.0	2263.9	356.0	
	AC Space Over Ga	1.0	1539.7	229.4	3883.6
GAR	Garage	1.0	1934.8	224.4	1934.8
OTH	Air Conditioned M Garage	1.0	164.0	56.4	164.0
	Net LIVABLE	cnt	4	(rounded)	11,305

COMMENT TABLE 1

**Square Footage Verification

(This does not include A/C space in the garage)

SKETCH

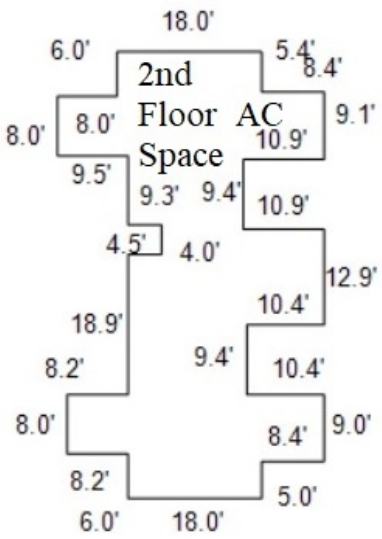

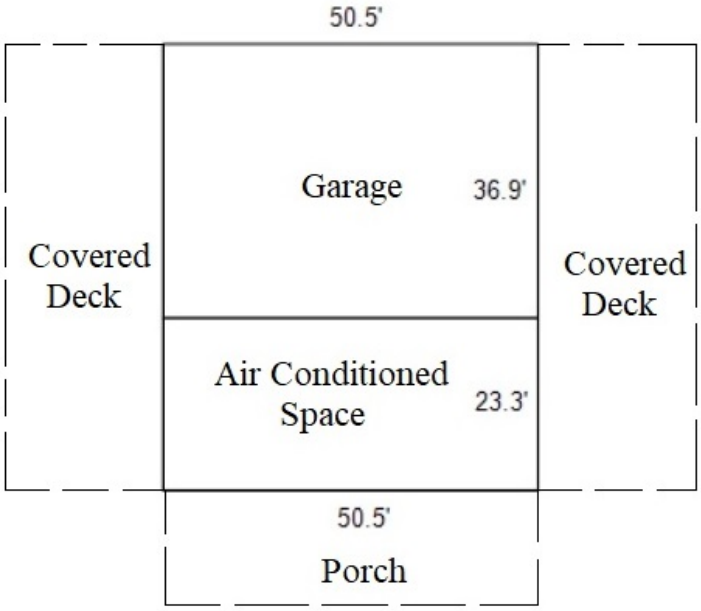

Guest House

AREA CALCULATIONS SUMMARY

Code	Description	Factor	Net Size	Perimeter	Net Totals
GLA1	Air Conditioned S	1.0	1176.7	147.6	1176.7
GLA2	Second Floor	1.0	1434.3	260.2	1434.3
GAR	Garage	1.0	1863.5	174.8	1863.5
	Net LIVABLE	cnt	2	(rounded)	2,611

COMMENT TABLE 1

Square Footage- Guest House

Denton County Appraiser

Prepared by:
Apex Residential Services
Chris Moore

3013 Dominion St
Denton, TX 76209
apexservices737@gmail.com
(469) 939-8065

Property Details

PIDN: **199608** GEO: **SG0170A-000000-0000-0004-**

Owner Name	**VERA RICHARD & KRYSTAL**
Mailing Address	1096 ROADRUNNER RD ARGYLE, TX 76226-6107
Location	1096 ROADRUNNER RD BARTONVILLE 76226-6107
Legal	KRAUSE ADDN LOT 4

Data up to date as of Feb 7, 2025 including 2024 Certified values.

Property Information

Property Type	R - Real
Deed Date	07/22/2011
Deed Volume	
Deed Page	
Docket No.	2011-70076
Exemptions	HS
Freeze Exempt	F
ARB Protest	F
Agent Code	816374
Land Acres	5.8129
Block	
Tract or Lot	4
Abstract Code	SG0170A
Neighborhood Code	DC31019

Value Information

Appraised Value	
Assessed Value	
AG Market Value	
AG Productivity Value	
Timber Market Value	
Timber Productivity Value	
Ten Percent Cap Loss Value	

Segment Information

Imp ID	Seg ID	Type Code	Description	Class	Year Built	Eff. Year Built	Area
4420298	15693801	MA	MAIN AREA	10D	2008	2008	7,482
4420298	15693802	MA2	SECOND FLOOR	10D	2008	2008	2,122
4420298	15693803	AG	ATTACHED GARAGE	10D	2008	2008	1,925
4420298	15693804	SA	STORAGE AREA	10D	2008	2008	117
4420298	15693805	SA	STORAGE AREA	10D	2008	2008	88
4420298	15693806	OP	OPEN PORCH	10D	2008	2008	180
4420298	15693807	OP	OPEN PORCH	10D	2008	2008	171
4420298	15693808	OP	OPEN PORCH	10D	2008	2008	171
4420298	15693809	OP	OPEN PORCH	10D	2008	2008	1,023
4420298	15693810	OP	OPEN PORCH	10D	2008	2008	266
4420298	15693811	OP	OPEN PORCH	10D	2008	2008	32
4420298	15693812	BL	BALCONY	10D	2008	2008	180
4420298	15693813	BL	BALCONY	10D	2008	2008	280
4420298	15693814	BL	BALCONY	10D	2008	2008	280
4420298	15693815	BL	BALCONY	10D	2008	2008	476
4420298	15693816	DE33	DETACHED GARAGE	10D	2008	2008	3,000
4420298	15693817	DL66	DETACHED LIVING QUARTERS	10D	2008	2008	975
4420298	15693818	OP	OPEN PORCH	10D	2008	2008	1,900
4420298	15693819	SA	STORAGE AREA	10D	2008	2008	136
4420299	15693820	PL	POOL	1750S2	2008	2008	1
4420299	15693821	TP	THERA POOL/SPA	SPA	2008	2008	1
						Total Living Area	9,604
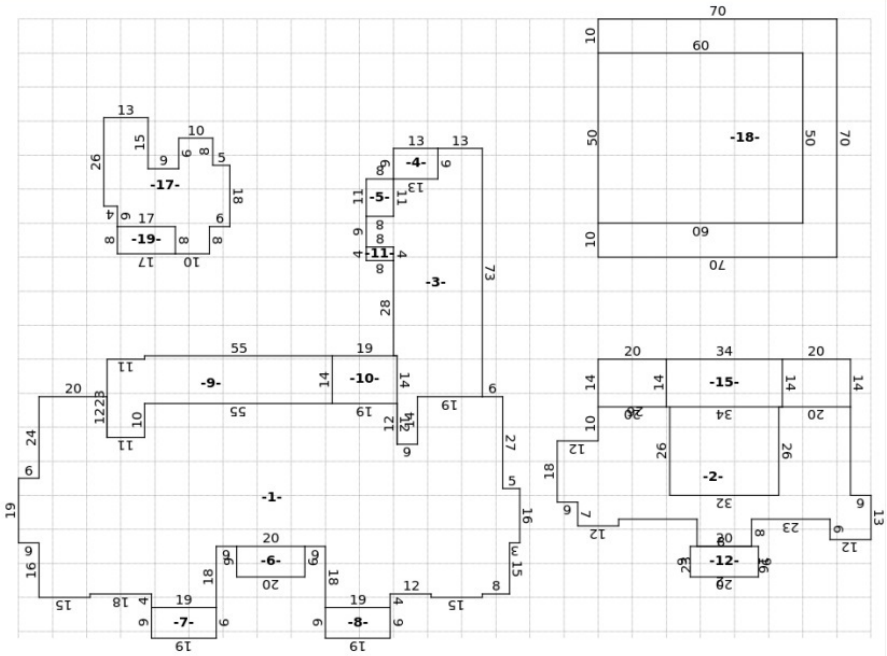
Improvement Sketch