The field data upon which this plat is based has a closure precision of one foot in 15,000 feet and an angular error of 03" seconds per angle point and was adjusted using the Compass Rule. This plat has been calculated for closure and is found to be accurate within one foot in 100,000 feet.

Equipment used: Topcon GTS-213 Total Station.

FLOOD HAZARD STATEMENT

THIS PROPERTY IS NOT IN A FLOOD HAZARD AREA AS PER THE FIRM FLOOD HAZARD MAP OF DEKALB COUNTY, GEORGIA, COMMUNITY PANEL NUMBER 13089C 0014K, DATED 08/15/19

ZONING INFORMATION:

CLASSIFICATION: RS100
SETBACKS: FRONT - 35 FEET
SIDE - 10 FEET
REAR - 40 FEET
MINIMUM LOT AREA - 15,000 sf.
MINIMUM LOT WIDTH - 100 FEET
MAXIMUM LOT COVERAGE - 35%
MAXIMUM BUILDING HEIGHT - 40 FEET

OWNER:

WATERFORD HOMES
5880 LIVE OAK PARKWAY
SUITE 180
NORCROSS, GA. 30093

24 HR CONTACT:

DREW CLOUGH
DREWCLOUGH@WATERFORDHOMES.COM
(770)883-0006

LOT AREA:

21,613 sf.
0.496 ACRES

FRONT YARD COVERAGE:

FRONT YARD AREA = 6586 sf.
PAVED AREA = 1846 sf.
FRONT YARD COVERAGE = 28.03%

PROPOSED LOT COVERAGE:

HOUSE = 3127 sf.
DRIVEWAY = 1670 sf.
FRONT WALK = 176 sf.
FRONT PORCH = 86 sf.
REAR PORCH = 300 sf.
REAR DECK = 258 sf.
WALLS = 249 sf.
POOL/COPING = 536 sf,
POOL DECKING = 668 sf.
POOL EQUIPMENT = 24 sfP4
TOTAL = 7094 sf.
LOT COVERAGE = 32.82%

STORMWATER CALCULATIONS:

AREA TO BE TREATED = 7094 sf.
STORAGE REQUIRED = 710 CF
INFILTRATION TRENCH TO BE UTILIZED
GRAVEL VOIDS: 710/0.4 = 1775 CF
TRENCH DIMENSIONS: 6'd x 4'w x 62'L
TOTAL GRAVEL VOLUME = 1808 CF
TOTAL STORAGE = 723.2 CF

LEGEND

IPF = 1/2" REBAR FOUND
IPS = 1/2" REBAR PIN SET
L.L. = LAND LOT
L.L.L. = LAND LOT LINE
P.L. = PROPERTY LINE
CL = CENTERLINE
B.L. = BUILDING LINE
R/W = RIGHT-OF-WAY
S.S.E. = SANITARY SEWER EASEMENT
D.E. = DRAINAGE EASEMENT
MH = MANHOLE
C.B. = CATCH BASIN
J.B. = JUNCTION BOX
HW = HEADWALL
D.I. = DROP INLET
PP = POWER/UTILITY POLE
F.H. = FIRE HYDRANT
I.E. = INVERT ELEVATION
F.F.E. = FINISHED FLOOR ELEVATION
F.F.B. = FINISHED FLOOR BASEMENT
F.F.G. = FINISHED FLOOR GARAGE
BOC = BACK OF CURB
EP = EDGE OF PAVEMENT
N/F = NOW OR FORMERLY
P.O.B. = POINT OF BEGINNING
—SS— = SANITARY SEWER LINE/PIPE
-X-X-X- = FENCE LINE
—O— = FLOOD HAZARD ZONE LINE
———— = STORM SEWER LINE/PIPE
—W— = WATER LINE
—G— = GAS LINE
CM = CONCRETE MONUMENT
C.E. = CONSTRUCTION EASEMENT
C&G = CURB AND GUTTER
LS = LIGHT STANDARD
OTP = OPEN TOP PIPE FOUND
CTP = CRIMP TOP PIPE FOUND

RUNOFF NOTE:

POST-CONSTRUCTION RUNOFF FROM PROPERTY WILL NOT BE GREATER THAN PRE-DEVELOPMENT RUNOFF ONTO NEIGHBORING PROPERTY INCLUDING STREET. USE FLO-WELLS, INFILTRATION TRENCHES, OR OTHER MEANS FOR ENSURING WATER QUALITY AND WATER MEASURES.

WHERE THE EXISTING RUNOFF LEAVES THE SITE IN A SHEET FLOW CONDITION, RUNOFF SHALL ALSO LEAVE THE SITE IN A SHEET FLOW CONDITION AFTER DEVELOPMENT.

DRIVE NOTE:

CONTRACTOR SHALL ADJUST AND/OR REPLACE ALL EXISTING CURB OR CURB AND GUTTER ALONG PROPERTY FRONTAGE TO THE PROPER HEIGHT OF 6" ABOVE THE EXISTING PAVEMENT ELEVATION. ANY MISSING CURBS AND/OR GAPS DUE TO DRIVEWAY RELOCATIONS, WILL REQUIRE NEW CURBS TO BE INSTALLED TO MATCH EXISTING.

STATE WATERS NOTE:

THE SUBJECT PROPERTY IS NOT WITHIN 200' OF WATERS OF THE STATE REQUIRING STATE AND CITY STREAM BUFFERS.

EROSION CONTROL NOTES:

A) THE ESCAPE OF SEDIMENT FROM THE SITE SHALL BE PREVENTED BY THE INSTALLATION OF EROSION AND SEDIMENT CONTROL MEASURES PRIOR TO LAND-DISTURBING ACTIVITIES.
B) EROSION CONTROL MEASURES WILL BE MAINTAINED AT ALL TIMES. IF FULL IMPLEMENTATION OF THE APPROVED PLAN DOES NOT PROVIDE FOR EFFECTIVE EROSION CONTROL, ADDITIONAL EROSION AND SEDIMENT CONTROL MEASURES SHALL BE IMPLEMENTED TO CONTROL OR TREAT THE SEDIMENT SOURCE.
C) DISTURBED AREAS LEFT IDLE 14 DAYS SHALL BE STABILIZED WITH TEMPORARY VEGETATION AND MULCH DISTURBED AREAS REMAINING IDLE 30 DAYS SHALL BE STABILIZED WITH PERMENANT VEGETATION.
D) EROSION AND SEDIMENT CONTROL MEASURES SHALL BE INSPECTED AT LEAST DAILY, AFTER EACH RAIN, AND REPAIRED AS NECESSARY.
E) ADDITIONAL EROSION AND SEDIMENT CONTROL MEASURES SHALL BE INSTALLED IF DETERMINED NECESSARY BY ON-SITE INSPECTION.
F) SILT FENCE SHALL BE "TYPE C" AS PER THE MANUAL FOR EROSION AND SEDIMENT CONTROL IN GEORGIA, AND BE WIRE REINFORCED (SEE ATTACHED DETAIL).
G) THE DESIGN PROFESSIONAL WHOSE SIGNED AND DATED SEAL APPEARS HEREON, AFFIRMS THAT THE SITE WAS VISITED PRIOR TO THE PREPARATION OF THIS SITE PLAN BY HIMSELF OR HIS AUTHORIZED AGENT UNDER HIS SUPERVISION.

STORMWATER MANAGEMENT:

THIS PROJECT MEETS ALL REQUIREMENTS OF THE STORMWATER MANAGEMENT SECTION IN CHAPTER 14 (ARTICLE IV) OF THE BROOKHAVEN CODE OF ORDINANCES.

A VERIFICATION CERTIFICATE SIGNED BY A REGISTERED ENGINEER THAT THE RUNOFF REDUCTION SYSTEM HAS BEEN INSTALLED ACCORDING TO THE APPROVED SITE PLAN WILL BE REQUIRED TO BE SUBMITTED PRIOR TO THE FINAL INSPECTION.

RUNOFF REDUCTION MEASURES ARE REQUIRED FOR ALL ADDITIONAL IMPERVIOUS AREAS GREATER THAN 3000 SQUARE FEET. SHOW LOCATION AND PROVIDE CALCULATIONS.

APPROVED
ENGINEERING
Andrea Wilkerson

TREE INVENTORY:

SAVED:

44" OAK(1.5)	18" TULIP	13" TULIP
24" OAK(0.5)	23" TULIP	28" OAK
24" OAK(0.5)	29" PINE	10/7" CYPRESS
	7" MAGNOLIA	9" CYPRESS

REMOVED:

31" SWEETGUM	26" OAK	22" PINE
14" MAPLE	33" OAK	15" OAK
28" OAK	29" OAK	25" PINE
27" TULIP(1.5)	24" PINE	23" PINE
30" MAPLE(1.5)	10/12" OAK	

APPROVED
ARBORIST
Jeff Dadisman

APPROVED
BUILDING
LaShawnda McCord

CITY OF BROOKHAVEN REQUIREMENTS FOR MAINTAINING TREE PROTECTION FENCE PER CODE SECTION 14-55(g)(2): THE TREE PROTECTION FENCE MUST REMAIN IN PLACE DURING FINAL LANDSCAPING AND STABILIZATION AND WILL NOT BE PERMITTED FOR REMOVAL FROM SITE UNTIL THE SITE FINAL INSPECTION WITH THE CITY LAND DEVELOPMENT INSPECTOR IS PASSED.

NO GRADED SLOPE SHALL EXCEED 3H:1V ON ALL DISTURBED AREAS

Ds1	Ds2	Ds3	Ds4

DISTURBED AREA = 14,160 sf.
0.325 ACRES

APPROVED
PLANNING & ZONING
Samantha Trust
Samantha Trust

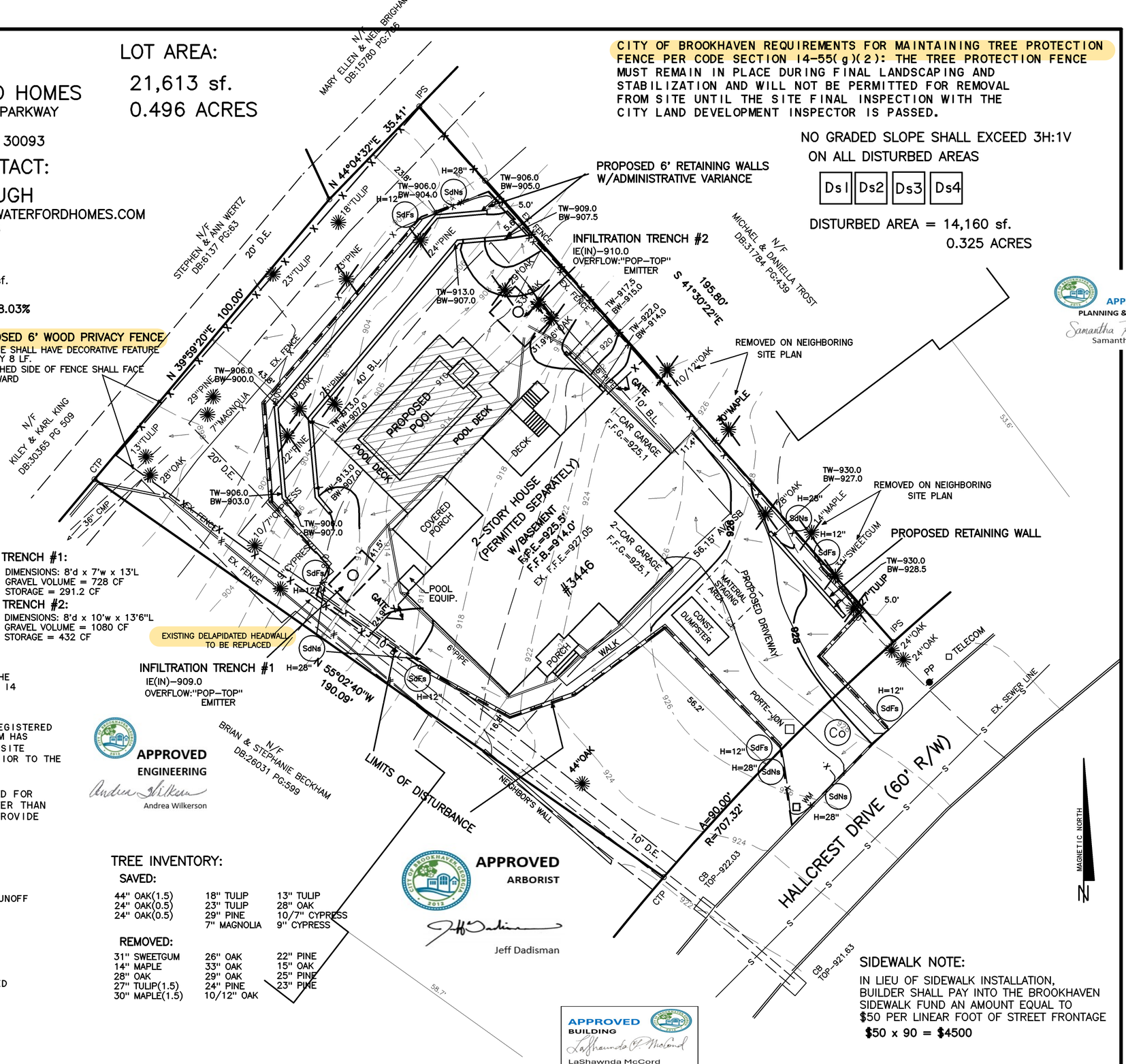

SIDEWALK NOTE:

IN LIEU OF SIDEWALK INSTALLATION, BUILDER SHALL PAY INTO THE BROOKHAVEN SIDEWALK FUND AN AMOUNT EQUAL TO $50 PER LINEAR FOOT OF STREET FRONTAGE
$50 x 90 = $4500

IF YOU DIG IN GEORGIA ...
CALL US FIRST @ 811

The City of Brookhaven does not certify the accuracy of these drawings. In approving these drawings and specifications, the City has relied upon the accuracy of the information and representations furnished herein by the engineer, or architect, and/or applicant. The City of Brookhaven assumes no liability or responsibility for the accuracy of the representations provided.

GSWCC GEORGIA SOIL AND WATER CONSERVATION COMMISSION
ROBERT W. RICHARDSON
LEVEL II CERTIFIED DESIGN PROFESSIONAL
CERTIFICATION NUMBER 0000089322
ISSUED: 10/11/2019 EXPIRES 10/11/2028
SIGNATURE 06/01/26 DATE

GEORGIA REGISTERED No. 3419 PROFESSIONAL LAND SURVEYOR ROBERT W RICHARDSON

20 0 20 40 60
GRAPHIC SCALE - FEET

PAGE 1 OF 4

ALPHA LAND SERVICES
P.O. BOX 1651
LOGANVILLE,GA. 30052
ENGINEERING * LAND SURVEYING
OFF: 770.696.4054 EMAIL: ROBERT@ALPHASURVEYOR.COM

POOL SITE PLAN FOR:
3446 HALLCREST DRIVE
TAX PARCEL# 18 303 07 015

REVISION: 06/01/26

LAND LOT: 303
DISTRICT: 18TH
DEKALB COUNTY
GEORGIA
FIELD DATE: 07/16/25
PLAT DATE: 04/22/26
REF. PLAT: PB. 63 P. 60

LOT: 15 BLOCK: B
SUB: HAMPTON HALL
AREA = 0.496 ACRES
JOB No. 25320SPP

APPROVED PLAN 06/18/2026
Permit # BLR26-00160

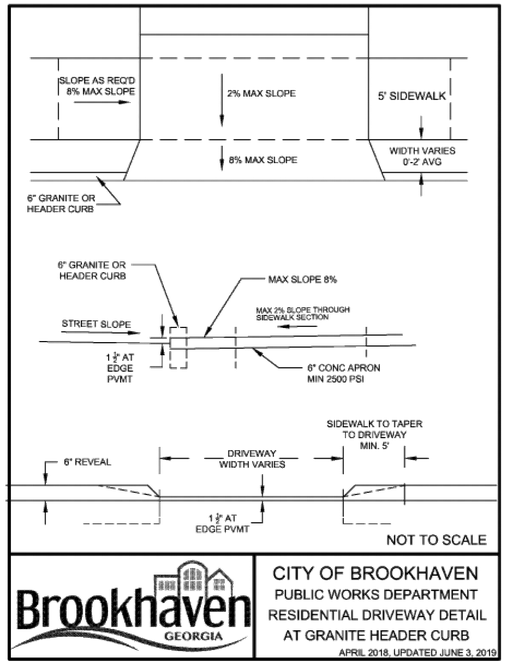

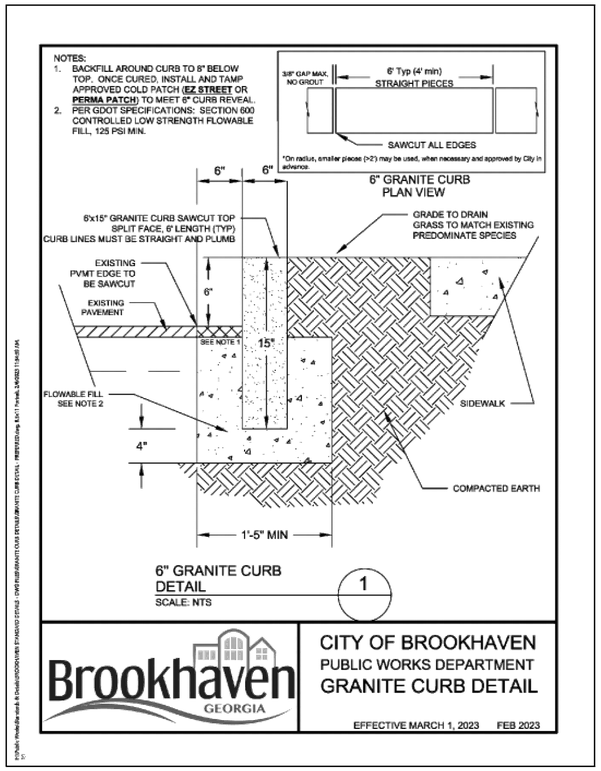

1.) DOWN DRAINS SHALL HAVE POSITIVE SLOPE AWAY FROM FOUNDATION.

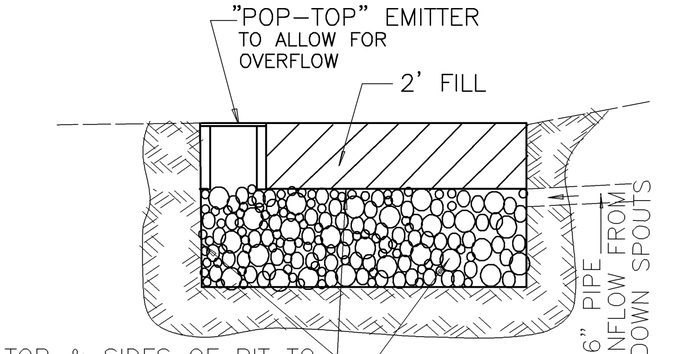

GRAVEL TRENCH : N.T.S.

2.) DOWN SPOUTS SHALL NOT BE DISCHARGE CLOSER THAN 5' FROM FOUNDATION

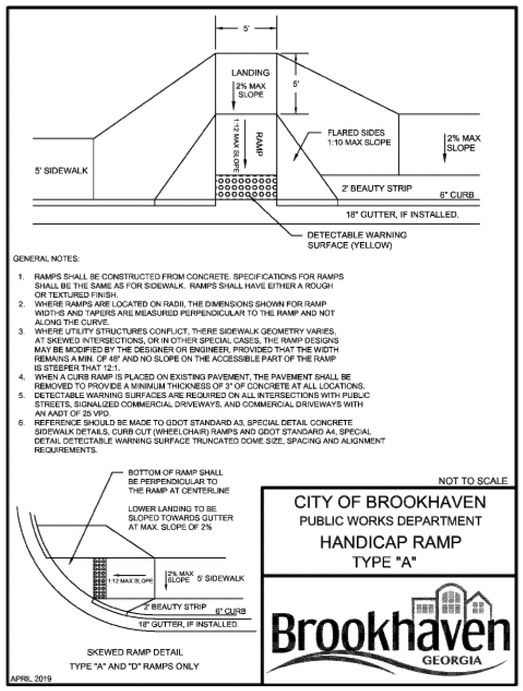

FIGURE 1

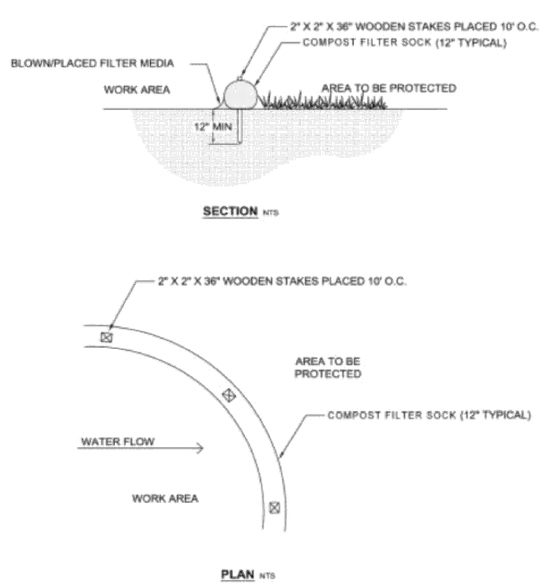

COMPOST FILTER SOCK
NTS

INFILTRATION TRENCH MAINTENANCE ACTIVITIES AND SCHEDULE	
ACTIVITY	SCHEDULE
– REPLACE GRAVEL AND TOPSOIL (WHEN CLOGGED)	AS NEEDED
– CLEAR INLETS OF DEBRIS, INCLUDING SEDIMENT AND OIL/GREASE – STABILIZE THE SURROUND AREA. – MOW GRASS AND REMOVE GRASS CLIPPINGS FROM FILTER STRIP AREAS, IF APPLICABLE – REPAIR UNDERCUT AND ERODED AREAS AT INFLOW/OUTFLOW STRUCTURES.	MONTHLY
– INSPECT PRETREATMENT DEVICES AND DIVERSION STRUCTURES FOR DEBRIS ACCUMULATION AND STRUCTURAL INTEGRITY; TAKE CORRECTIVE ACTION AS NEEDED.	SEMIANNUALLY
– AERATE PRETREATMENT BASIN BOTTOM OR DE-THATCH BASIN BOTTOM, IF APPLICABLE.	ANNUALLY
– SCRAPE PRETREATMENT BASIN BOTTOM TO REMOVE ACCUMULATED SEDIMENT AND RE-SEED GROUND COVER, IF APPLICABLE.	EVERY 5 YEARS
– TOTALLY REHABILLITATE THE TRENCH AND RESTORE ITS DESIGN STORAGE CAPACITY. – EXCAVATE TRENCH WALLS TO EXPOSE CLEAN SOIL IF APPLICABLE.	UPON FAILURE

GSWCC GEORGIA SOIL AND WATER CONSERVATION COMMISSION
ROBERT W. RICHARDSON
LEVEL II CERTIFIED DESIGN PROFESSIONAL
CERTIFICATION NUMBER 0000089322
ISSUED 10/11/2019 EXPIRES 10/11/2021 03/11/26
SIGNATURE DATE

GEORGIA REGISTERED No. 3419 PROFESSIONAL LAND SURVEYOR ROBERT W RICHARDSON

ALPHA LAND SERVICES
P.O. BOX 1651
LOGANVILLE,GA. 30052
ENGINEERING * LAND SURVEYING
OFF: 770.696.4054 EMAIL: ROBERT@ALPHASURVEYOR.COM

REVISION:

REF. PLAT: PB. 63 P. 60

NOTES & DETAILS FOR:

3446 HALLCREST DRIVE

TAX PARCEL# 18 303 07 015

LAND LOT: 303
DISTRICT: 18TH
DEKALB COUNTY
GEORGIA
FIELD DATE: 07/16/25
PLAT DATE: 03/11/26

LOT: 15 BLOCK: B
SUB: HAMPTON HALL

AREA = 0.496 ACRES
JOB No. 2532OS2

APPROVED PLAN 06/18/2026
PERMIT# BLR26-00160

INSTALLATION SPECIFICATIONS:
1. INSTALLATION, PRODUCT SELECTION, AND MAINTENANCE SHALL BE IN ACCORDANCE WITH THE GSWCC MANUAL FOR EROSION AND SEDIMENT CONTROL IN GEORGIA.
2. LOOSEN COMPACTED SOIL TO A MINIMUM DEPTH OF THREE (3) INCHES PRIOR TO APPLICATION.
3. DRY STRAW OR HAY SHALL BE IN CLEAN CONDITION AND APPLIED BY HAND OR MACHINE TO A THICKNESS OF TWO (2) TO FOUR (2) INCHES.
4. STRAW OR HAY MULCH SHALL BE ANCHORED IMMEDIATELY AFTER APPLICATION.
5. MULCH ON SLOPES GREATER THAN 3% SHOULD BE ANCHORED WITH EMULSIFIED ASPHALT OR OTHER SUITABLE TACKIFIER.
6. ADDITIONAL MULCHING IS REQUIRED IF THE MINIMUM THICKNESS IS NOT ACHIEVED OR IF SOIL COVERAGE IS LESS THAN 90%.

Ds1 **DISTURBED AREA STABILIZATION WITH MULCHING**

INSTALLATION SPECIFICATIONS:
1. INSTALLATION, SEED SELECTION, AND MAINTENANCE SHALL BE IN ACCORDANCE WITH THE GSWCC MANUAL FOR EROSION AND SEDIMENT CONTROL IN GEORGIA.
2. ADDITIONAL EROSION CONTROL MEASURES MAY BE NECESSARY TO ALLOW PROPER GERMINATION AND STABILIZATION.
3. SOIL SURFACES MAY NEED TO BE TILLED, PITTED, OR OTHERWISE SCARIFIED TO ALLOW FOR PROPER SEED LODGING AND GERMINATION.
4. APPLY LIME AT A RATE OF ONE TON PER ACRE AS NEEDED.
5. APPLY 10-10-10 FERTILIZER TO SOILS WITH LOW FERTILITY AT A RATE OF 500 TO 700 POUNDS PER ACRE.
6. SEEDS SHALL BE PLANTED AT A DEPTH OF TEN TIMES THE SEED DIAMETER.
7. ACCEPTABLE PLANTING METHODS INCLUDE HYDRO-SEEDING, DRILLING, AND BROADCAST SPREADING BY MACHINE OR HAND.

SPECIES	PLANTING RATES PER ACRE*	TYPICAL PLANTING MONTHS J	F	M	A	M	J	J	A	S	O	N	D
BARLEY	144 LBS								X	X	X	X	X
ANNUAL LESPEDEZA	40 LBS	X	X	X	X								
WEEPING LOVEGRASS	4 LBS		X	X	X	X	X						
BROWNTOP MILLET	40 LBS				X	X	X	X					
OATS	128 LBS									X	X	X	
RYE	168 LBS								X	X	X	X	X
ANNUAL RYEGRASS	40 LBS	X	X	X					X	X	X	X	X
SUDANGRASS	60 LBS			X	X	X	X	X	X				
WHEAT	180 LBS									X	X	X	X

* PLANTING RATES SHOWN ARE FOR BROADCAST APPLICATIONS. REDUCE THESE RATES BY 50% FOR SEED DRILLING.

Ds2 **DISTURBED AREA STABILIZATION WITH TEMPORARY SEEDING**

PLANTING SPECIFICATIONS:
1. INSTALLATION, SEED SELECTION, AND MAINTENANCE SHALL BE IN ACCORDANCE WITH THE GSWCC MANUAL FOR EROSION AND SEDIMENT CONTROL IN GEORGIA.
2. PERMANENT VEGETATION SHALL INCLUDE GROUND PREPARATION, LIMING, FERTILIZING, SEEDING, AND MULCHING.
3. INTERIM EROSION CONTROL MEASURES SHALL REMAIN IN PLACE UNTIL AT LEAST 70% OF THE EXPOSED SURFACE IS SUFFICIENTLY STABILIZED.
4. PREPARE THE LAND FOR SEEDING BY APPLYING LIME AND FERTILIZER AND DISKING THE SURFACE TO A MAXIMUM DEPTH OF FOUR (4) INCHES. FINISHED SURFACE SHALL BE SMOOTH, UNIFORM, AND FREE OF DEBRIS SUCH AS TRASH, ROCKS, ROOTS, AND WEEDS.
5. MULCH SHALL BE APPLIED UNIFORMLY WITHIN 24 HOURS OF SEEDING.
6. REFER TO THE MANUAL FOR EROSION AND SEDIMENT CONTROL IN GEORGIA FOR ADDITIONAL PLANTING SPECIFICATIONS AND ALTERNATIVE VEGETATIVE COVER SUCH AS TREES AND SHRUBS.

SPECIES	PLANTING RATES PER ACRE*	TYPICAL PLANTING MONTHS J	F	M	A	M	J	J	A	S	O	N	D
BAHIA	60 LBS	X	X	X	X	X	X	X	X	X	X	X	X
BERMUDA (HULLED)	10 LBS		X	X	X	X	X						
BERMUDA (UNHULLED)	10 LBS	X	X								X	X	X
TALL FESCUE	50 LBS			X	X				X	X	X	X	
WEEPING LOVEGRASS	4 LBS			X	X	X	X						
SERICEA LESPEDEZA	60 LBS		X	X	X	X	X						

* PLANTING RATES SHOWN ARE FOR BROADCAST APPLICATIONS. REDUCE THESE RATES BY 50% FOR SEED DRILLING.

LIME AND FERTILIZER APPLICATION:
1. GRADED AREAS REQUIRE LIME APPLICATION.
2. AGRICULTURAL LIME SHALL BE APPLIED AT A RATE OF ONE (1) TO TWO (2) TONS PER ACRE UNLESS SOIL TESTS SUGGEST OTHERWISE. REPEAT APPLICATION EVERY FIVE (5) YEARS OR AS NEEDED.

TYPE OF SPECIES	PLANTING YEAR	RECOMMENDED N-P-K	FERTILIZER RATE PER ACRE
COOL SEASON GRASSES	1	6-12-12	1500 LBS
	2	6-12-12	1000 LBS
	MAINTENANCE	10-10-10	400 LBS
COOL SEASON GRASSES AND LEGUMES	1	6-12-12	1500 LBS
	2	0-12-12	1000 LBS
	MAINTENANCE	0-10-10	400 LBS
WARM SEASON GRASSES	1	6-12-12	1500 LBS
	2	6-12-12	800 LBS
	MAINTENANCE	10-10-10	400 LBS
WARM SEASON GRASSES AND LEGUMES	1	6-12-12	1500 LBS
	2	0-10-10	1000 LBS
	MAINTENANCE	0-10-10	400 LBS

* PERMANENT SEEDING MAY BE SUBSTITUTED WITH SODDING (Ds4) AT THE DISCRETION OF THE PROPERTY OWNER AND LOCAL INSPECTOR.

Ds3 **DISTURBED AREA STABILIZATION WITH PERMANENT SEEDING**

Ds4

MATERIALS

- Sod selected should be certified. Sod grown in the general area of the project is desirable.
- Sod should be machine cut and contain 3/4" (+ or - 1/4") of soil, not including shoots or thatch.
- Sod should be cut to the desired size within ±5%. Torn or uneven pads should be rejected.
- Sod should be cut and installed within 36 hours of digging.
- Avoid planting when subject to frost heave or hot weather, if irrigation is not available.
- The sod type should be shown on the plans or installed according to Table 2. See page 60 for your Resource Area.

Table 2. Sod Planting Requirements

Grass	Varieties	Resource Area	Growing Season
Bermudagrass	Common Tifway Tifgreen Tiflawn	M-L, P,C P,C P,C P,C	Warm weather
Bahiagrass	Pensacola	P,C	Warm weather
Centipede	___	P,C	Warm weather
St. Augustine	Common Bitterblue Raleigh	C	Warm weather
Zoysia	Emerald Myer	P,C	Warm weather
Tall Fescue	Kentucky 31	M-L, P	Cool weather

MAINTENANCE

- Re-sod areas where an adequate stand of sod is not obtained.
- New sod should be mowed sparingly. Grass height should not be cut less than 2"-3" or as specified.
- Apply one ton of agricultural lime as indicated
- Bring soil surface to final grade. Clear surface of trash, woody debris, stones and clods larger than 1". Apply sod to soil surfaces only and not frozen surfaces, or gravel type soils.
- Topsoil properly applied will help guarantee a stand. Don't use topsoil recently treated with herbicides or soil sterilants.
- Mix fertilizer into soil surface. Fertilize based on soil tests or Table 1. For fall planting of warm season species, half the fertilizer should be applied at planting and the other half in the spring.
- Agricultural lime should be applied based on soil tests or at a rate of 1-2 tons/acre.
- Lay sod with tight joints and in straight lines. Don't overlap joints. Stagger joints and do not stretch sod.

Table 1. Fertilizer Requirements for Soil Surface Application

Fertilizer Type (lbs./acre)	Fertilizer Rate (lbs./sq.ft.)	Fertilizer Rate	Season
10-10-10	1000	.025	Fall

- On slopes steeper than 3:1, sod should be anchored with pins or other approved methods.
- Installed sod should be rolled or tamped to provide good contact between sod and soil.
- Irrigate sod and soil to a depth of 4" immediately after installation.
- Sod should not be cut or spread in extremely wet or dry weather.
- Irrigation should be used to supplement rainfall for a minimum of 2-3 weeks.
- Fertilize grasses in accordance with soil tests or Table 3.

Table 3. Fertilizer Requirements for Sod

Types of Species	Planting Year	Fertilizer (N-P-K)	Rate (lbs./acre)	Nitrogen Top Dressing Rate (lbs./acre)
Cool season grasses	First Second Maintenance	6-12-12 6-12-12 10-10-10	1500 1000 400	50-100 --- 30
Warm season	First Second	6-12-12 6-12-12	1500 800	50-100 50-100

SILT FENCE Sd1-NS (TYPE A and B)

SIDE VIEW

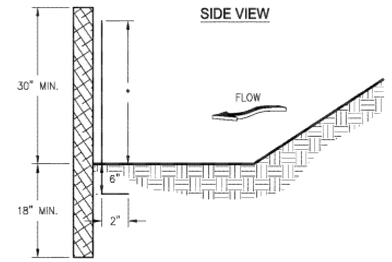

FRONT VIEW

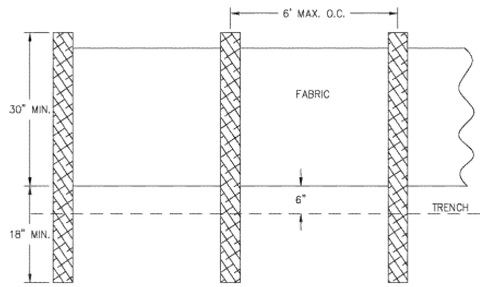

NOTES:
1. USE STEEL OR WOOD POSTS OR AS SPECIFIED BY THE EROSION, SEDIMENTATION, AND POLLUTION CONTROL PLAN.
2. HEIGHT (*) IS TO BE SHOWN ON THE EROSION, SEDIMENTATION, AND POLLUTION CONTROL PLAN.

Figure 6-27.1

GSWCC 2016 Edition 6-141

MAINTENANCE
The exit shall be maintained in a condition which will prevent tracking or flow of mud onto public rights-of-way. This may require periodic top dressing with 1.5-3.5 inch stone, as conditions demand, and repair and/or cleanout of any structures to trap sediment. All materials spilled, dropped, washed, or tracked from vehicles or site onto roadways or into storm drains must be removed immediately.

Co

CRUSHED STONE CONSTRUCTION EXIT

EXIT DIAGRAM

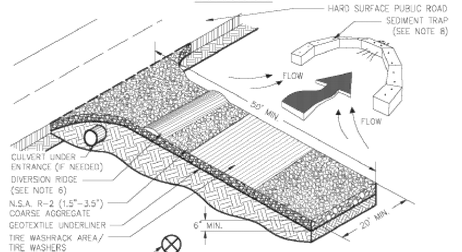

ENTRANCE ELEVATION

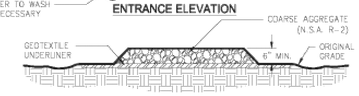

NOTES:
1. AVOID LOCATING ON STEEP SLOPES OR AT CURVES ON PUBLIC ROADS.
2. REMOVE ALL VEGETATION AND OTHER UNSUITABLE MATERIAL FROM THE FOUNDATION AREA, GRADE, AND CROWN FOR POSITIVE DRAINAGE.
3. AGGREGATE SIZE SHALL BE IN ACCORDANCE WITH NATIONAL STONE ASSOCIATION R-2 (1.5"-3.5" STONE).
4. GRAVEL PAD SHALL HAVE A MINIMUM THICKNESS OF 6".
5. PAD WIDTH SHALL BE EQUAL FULL WIDTH AT ALL POINTS OF VEHICULAR EGRESS, BUT NO LESS THAN 20'.
6. A DIVERSION RIDGE SHOULD BE CONSTRUCTED WHEN GRADE TOWARD PAVED AREA IS GREATER THAN 2%.
7. INSTALL PIPE UNDER THE ENTRANCE IF NEEDED TO MAINTAIN DRAINAGE DITCHES.
8. WHEN WASHING IS REQUIRED, IT SHOULD BE DONE ON AN AREA STABILIZED WITH CRUSHED STONE THAT DRAINS INTO AN APPROVED SEDIMENT TRAP OR SEDIMENT BASIN (DIVERT ALL SURFACE RUNOFF AND DRAINAGE FROM THE ENTRANCE TO A SEDIMENT CONTROL DEVICE).
9. WASHRACKS AND/OR TIRE WASHERS MAY BE REQUIRED DEPENDING ON SCALE AND CIRCUMSTANCE. IF NECESSARY, WASHRACK DESIGN MAY CONSIST OF ANY MATERIAL SUITABLE FOR TRUCK TRAFFIC THAT REMOVE MUD AND DIRT.
10. MAINTAIN AREA IN A WAY THAT PREVENTS TRACKING AND/OR FLOW OF MUD ONTO PUBLIC RIGHTS-OF-WAYS. THIS MAY REQUIRE TOP DRESSING, REPAIR AND/OR CLEANOUT OF ANY MEASURES USED TO TRAP SEDIMENT.

Figure 6-14.1

GSWCC (Amended - 2013) 6-142

GSWCC GEORGIA SOIL AND WATER CONSERVATION COMMISSION
ROBERT W. RICHARDSON
LEVEL II CERTIFIED DESIGN PROFESSIONAL
CERTIFICATION NUMBER 0000089322
ISSUED: 10/11/2019 EXPIRES 10/11/2022
SIGNATURE 03/11/26 DATE

GEORGIA REGISTERED No. 3419 PROFESSIONAL LAND SURVEYOR ROBERT W RICHARDSON

PAGE 2 OF 3

ALPHA LAND SERVICES
P.O. BOX 1651
LOGANVILLE,GA. 30052
ENGINEERING * LAND SURVEYING
OFF: 770.696.4054 EMAIL: ROBERT@ALPHASURVEYOR.COM

NOTES & DETAILS FOR:

3446 HALLCREST DRIVE

TAX PARCEL# 18 303 07 015

REVISION:

REF. PLAT: PB. 63 P. 60

LAND LOT: 303
DISTRICT: 18TH
DEKALB COUNTY
GEORGIA
FIELD DATE: 07/16/25
PLAT DATE: 03/11/26

LOT: 15 BLOCK: B
SUB: HAMPTON HALL
AREA = 0.496 ACRES
JOB No. 25320S2

APPROVED PLAN 06/18/2026
Permit # BLR26-00160

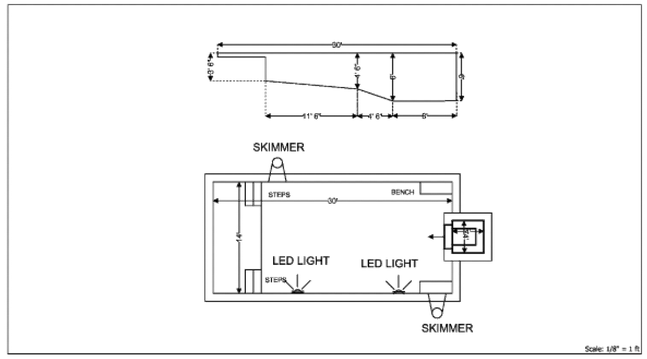

Applicable Building Codes:

2024 I-Codes w/ GA Amendments (2026), 2023 NEC w/ GA Amendments (2026)

2015 IECC W/ GA AMENDMENTS

NEPTUNE POOLS

4505 BAMFORD DRIVE

SUGAR HILL, GA, 30518

770-831-5415

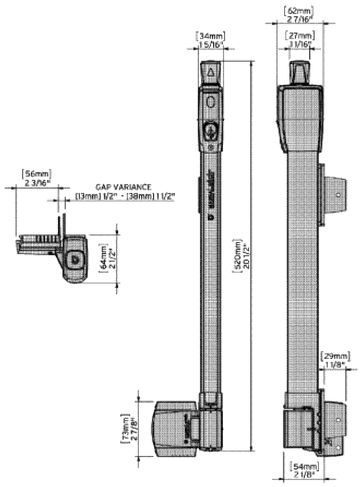

GEORGIA811 www.Georgia811.com

Know what's below. Call before you dig.

ALL DOORS WITH DIRECT ACCESS TO THE ENCLOSED POOL AREA AND ALL WINDOWS WITH A SILL HEIGHT OF 48 INCHES OR LESS ABOVE THE FINISH FLOOR THAT OPEN TO THE ENCLOSED POOL AREA SHALL BE EQUIPPED WITH AN ALARM THA PRODUCES AN AUDIBLE WARNING WHEN THE DOOR OR WINDOW IS OPENED IN ACCORDANCE WITH INTERNATIONAL ~~BUILDING~~ CODE

POOL AND SPA

HEATED POOL SHALL BE EQUIPPED WITH A VAPOR-RETARDANT POOL COVER ON OR AT THE WATER SURFACE. POOLS HEATED TO MORE THAN 90 DEGREES FARENHEIGHT (32 DEGREES CELCIUS) SHALL HAVE A POOL COVER WITH A MINIMUM INSULATION VALUE OF R-12.

FENCE

FENCE TO BE A MINIMUM HEIGHT OF 5 FEET AND MAX HEIGHT OF 6 FEET IF LOCATED IN BUILDING SETBACKS. FENCE TO CONSIST OF VERTICAL PICKETS SPACED NO FURTHER THAN 4 INCHES WITH NO LADDER EFFECT THAT COULD AID IN UNAUTHORIZED CLIMBING.

GATES WILL HAVE A SELF-CLOSING MECHANISMS AND SELF-LATCHING SAFETY LOCKS.

DOUBLE GATES SHALL HAVE AT LEAST ONE LEAF SECURED IN PLACE AND THE ADJACENT LEAF SHALL BE SECURED WITH A SELF-LATCHING DEVICE. THE GATE AND BARRIER SHALL NOT HAVE OPENINGS LARGER THAN ½ INCH OF THE RELEACE MECHANISM

IF ONLY ONE SIDE OF THE FENCE IS TO BE FINISHED, THE FENCE SHALL BECONSTRUCTED SO THAT THE FINISHED SIDE FACES THE NEIGHBORS' PROPERTY.

POOL FENCES MUST INCLUDE AT LEAST ONE GATED EXIT WITH A MINIMUM WIDTH OF 36 INCHES. THE EXIT MUST OPEN OUTWARD AND BE SLEF-CLOSING AND SELF-LATCHING.

#3 (3/8") REBAR SCHED .40 SPEC. 615 USED THROUGHOUT POOL EXCEPT IN BEAM

STEEL WILL BE 12" O.C. EXCEPT IN BOND BEAM

STARTING AT 6½ " DEPTH AND RUNNING AROUND THE DEEP END BOWL TO THE OPPOSITE SIDE OF THE POOL AT 6½ " DEPTH. #3 REBAR SHALL BE INSTALLED ON 12" CENTERS 10" LONG BARS WILL START AT THE TOP OF THE BEAM AND BE SPLICED INTO THE FLOOR.

ALL STEEL TO BE CONTINUOUS BY SPLICING

ALL SPLICES SHOULD BE APPROXIMATELY 18" WITH A MINIMUM OF 12" AND TWO TIES.

ALL STEEL WILL BE BLOCKED 2" OFF DIRT.

STANDARD EQUIPMENT

PUMP AND FILTER:
- Jandy Variable Speed "E" High Efficiency Pump (sized for maximum 6 hour turnover rate) Pool/spa combos
- Jandy Stealth pump (sized for maximum of 6 hour turnover rate) Pool only projects
- Jandy "L" series cartridge filter (CL460 up to 800 sq. ft. CL580 over 800 sq. ft.) No backwash is required.
- Equipment set on equipment pads

PLUMBING AND VALVES:
- Schedule 40 PVC pipe
- Jandy control valves
- Jandy check valves (where needed)
- (2) 2" Skimmer lines with a jandy control valve
- 2" Return main line with 1-1/2" lines through wall
- Dual main drains with 2" lines and VGB compliant covers

CLEANER:
- Polaris 280 with ½ hp booster pump and dedicated return, unless the optional in-floor pool cleaner is included in contract.

SPA:
- (8) Waterway power jets with interchangeable internals
- Polaris QT 1 ½ hp air blower
- Dual main drain with 3" lines and VGB compliant covers

CONTROLS:
- Jandy Aqualink PDA Automation System w/Jandy iAqualink2.0 Smart Device (pool/spa combos)
- Jandy Aqualink P4 Automation System w/optional Jandy iAqualink2.0 smart device
- Aqualink Handheld remotes included
- Intermatic Control Center with dual timers (one for pool pump and one for cleaner pump)
- Intermatic freeze protection thermostat

HEATER:
- Jandy Pro Series JXI400N, 400K BTU Natural Gas Heater (all pool/spa combos, or if included in Pool only project's contract)
- Gas line not included
- Heater can be used to heat pool and spa

LIGHTS:
- Jandy Pro Series Watercolors Nicheless LED light for pool
- Jandy Pro Series Watercolors Nicheless LED light for spas
- Engineered with New HydroCool technology which provides longer lasting performance.

WATER PURIFICATION:
- Jandy Pro Series AquaPure salt-water chlorine sanitizing system
- Electronically purifies pool by converting table salt to chlorine

CHEMICAL FEEDER:
- Rainbow In-line chlorine feeder

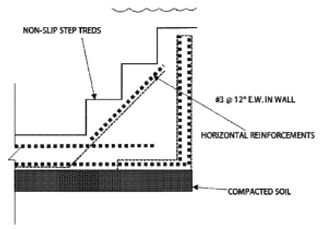

STAIR DETAIL

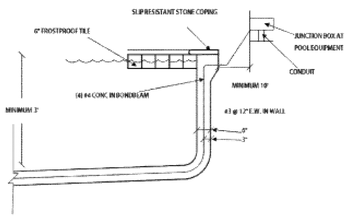

SHALLOW END DETAIL

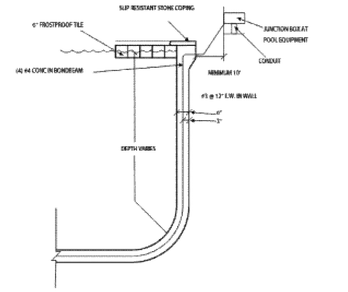

DEEP END DETAIL

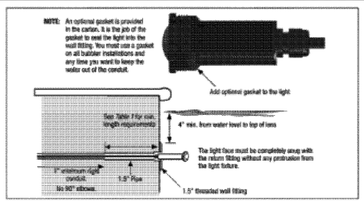

6W & 12W lights: Min/Max Voltage per cord length		
Cord Length	**Min. Voltage**	**Max. Voltage**
100 Feet	10.7VAC	13.2VAC
150 Feet	11.82VAC	13.8VAC

24W Lights: Min/Max Voltage per cord length		
Cord Length	**Min. Voltage**	**Max. Voltage**
100 Feet	10.9VAC	13.5VAC
150 Feet	11.43VAC	14.1VAC

Table 2. Jandy LED Light Voltage Min/Max Levels

NOTE: For optimal lighting results it is recommended to place lights 12-18" below the water line.

BONDING

BONDING SHALL BE DONE IN ACCORDANCE WITH SECTION 680.26 OF THE NATIONAL ELECTRIC CODE (NEC).

BONDING OF PERIMETER SURFACES MUST BE IN ACCORDANCE AND BE ATTACHED TO THE CONCRETE POOL REINFORCING STEEL OR COPPER CONDUCTOR GRID AT A MINIMUM OF FOUR EQUAL POINTS AROUND THE PERMIMETER

ALL METAL PARTS OF POOL STRUCTURE WILL BONDED TOGETHER WITH AN 8 AWG SOLID COPPER CONDUCT

ALL METAL PARTS OF ELECTRICAL EQUIPMENT ASSOCIATED WITH WATER CIRCULATING SYSTEM MUST BE BONDED

EQUIPOTENTIAL BONDING MUST EXTEND A MINIMUM OF 3 FEET HORIZONTALLY BEYOND THE INSIDE WALLS OF A POOL/SPA

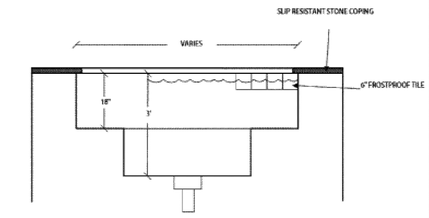

SPA DETAIL

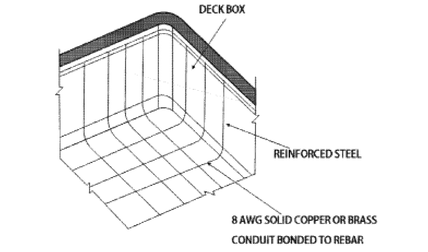

GRID DETAIL

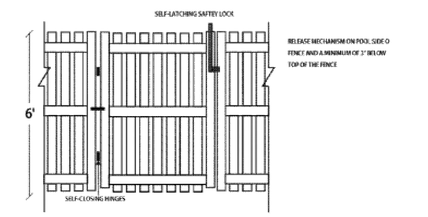

6' WOOD GATE DETAIL

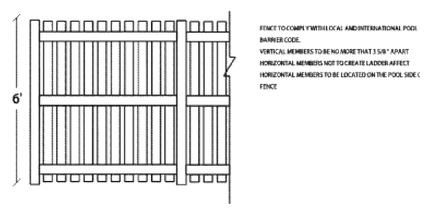

6' WOOD FENCE DETAIL

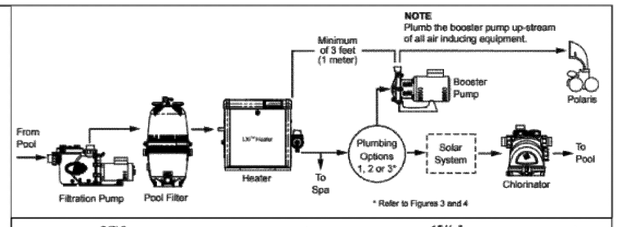

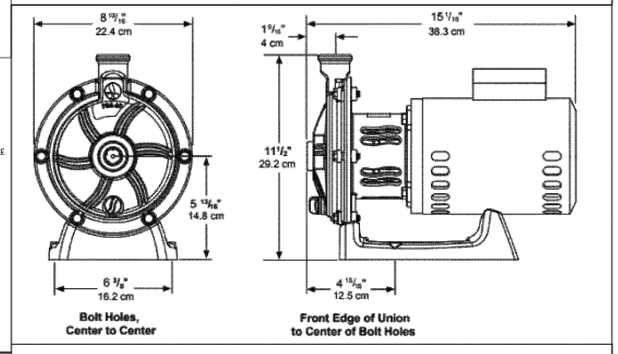

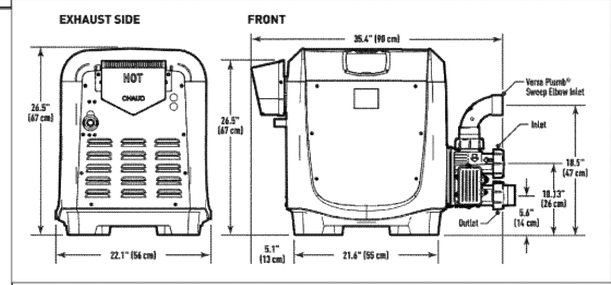

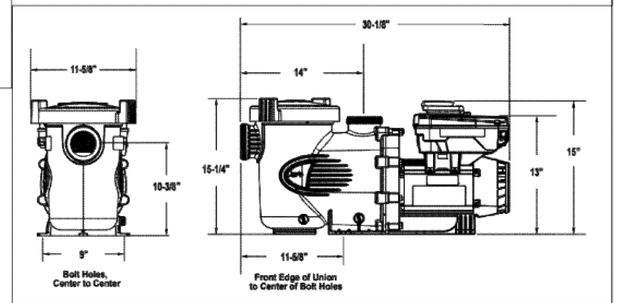

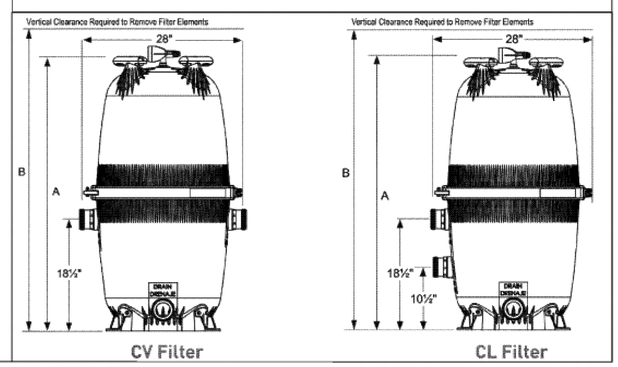

GSWCC GEORGIA SOIL AND WATER CONSERVATION COMMISSION

ROBERT W. RICHARDSON
LEVEL II CERTIFIED DESIGN PROFESSIONAL
CERTIFICATION NUMBER 0000089322
ISSUED 10/11/2019 EXPIRES 10/11/2025

RWR 06/01/26
SIGNATURE DATE

GEORGIA REGISTERED No. 3419 PROFESSIONAL LAND SURVEYOR ROBERT W RICHARDSON

ALPHA LAND SERVICES
P.O. BOX 1651
LOGANVILLE,GA. 30052
ENGINEERING * LAND SURVEYING
OFF: 770.696.4054 EMAIL: ROBERT@ALPHASURVEYOR.COM

REVISION: 06/01/26

REF. PLAT: PB. 63 P. 60

NOTES & DETAILS FOR:

3446 HALLCREST DRIVE

TAX PARCEL# 18 303 07 015

LAND LOT: 303
DISTRICT: 18TH
DEKALB COUNTY
GEORGIA
FIELD DATE: 07/16/25
PLAT DATE: 03/11/26

LOT: 15 BLOCK: B
SUB: HAMPTON HALL

AREA = 0.496 ACRES
JOB No. 25320S4

APPROVED PLAN 06/18/2026
PERMIT# BLR26-00160